REV.	DESCRIPTION	DRAWN	CHECKED	APPROVED
A	NEW RELEASE	ZQJ 11/18/2015	~	ZQJ 11/18/2015
B	ADD P/N CODE	CJJ 11/18/2015	~	CJJ 11/18/2015

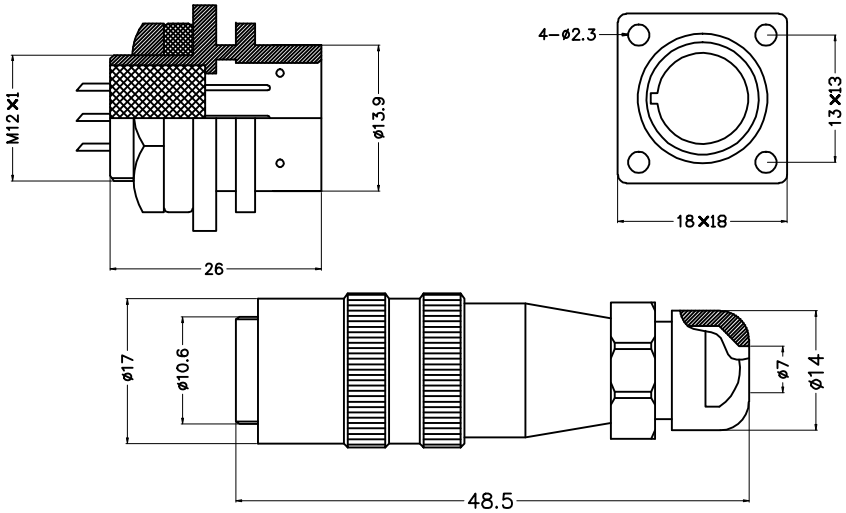

外形尺寸 Shell size	XT12-2	XT12-3	XT12-4	XT12-5	XT12-6	XT12-7
	正装	正装	正装	正装	正装	正装
接触排列方式、焊杯孔径及焊点孔径 Contact Arrangements see spec drawing for cup and hole diameter						
额定电流/电压 Current rating/voltage	5A-125V	5A-125V	5A-125V	4A-125V	4A-125V	4A-125V
工作电压 (AC.V) 分钟 Operatin limit voltage(AC.V.rms)	200	200	200	200	200	200
耐电压 (AC.V) 1分钟 Withstand voltage(AC.V.rms) 1minute	1500	1500	1500	1500	1500	1500
绝缘阻抗 (MΩ) DC 500V Insulation resistance(MΩ) DC 500V	2000	2000	2000	2000	1500	1500
接触阻抗 (MΩ) DC 1A Contact resistance(MΩ) DC 1A	3	3	3	3	3	3
焊杯口孔径Φ (mm) Solder cup mouth aperture	0.8	0.8	0.8	0.8	0.8	0.8
焊杯内孔径 Φ (mm) Solder inter diameter	1.5	1.5	1.5	1.5	1.5	1.5

XT12 系列 2T-7T

GENERAL TOLERANCE		ANGLE TOLERANCE	
X.	±0.60	X.	±5°
.X	±0.38	.X	±3°
.XX	±0.25	.XX	±2°

PROJECTION		TITLE	XT12 Micro Jack Connector
UNITS	mm		
SHEET SIZE	A4	SERIES	XT12

ITEM	PART NAME
2	CONTACT
1	HOUSING

DRAWING TYPE	CUSTOMER		
SCALE	1:1	SHEET	1 OF 1
DRAWING NO.			

LANL 蓝翎电子

慈溪蓝翎电子有限公司
CIXI LANLING ELECTRONICS CO.,LTD.